WideLookLt

"Wide Look Lt" is the glazed insert from TGD specifically engineered for freezing top appliances of the most advanced retail industry suppliers.

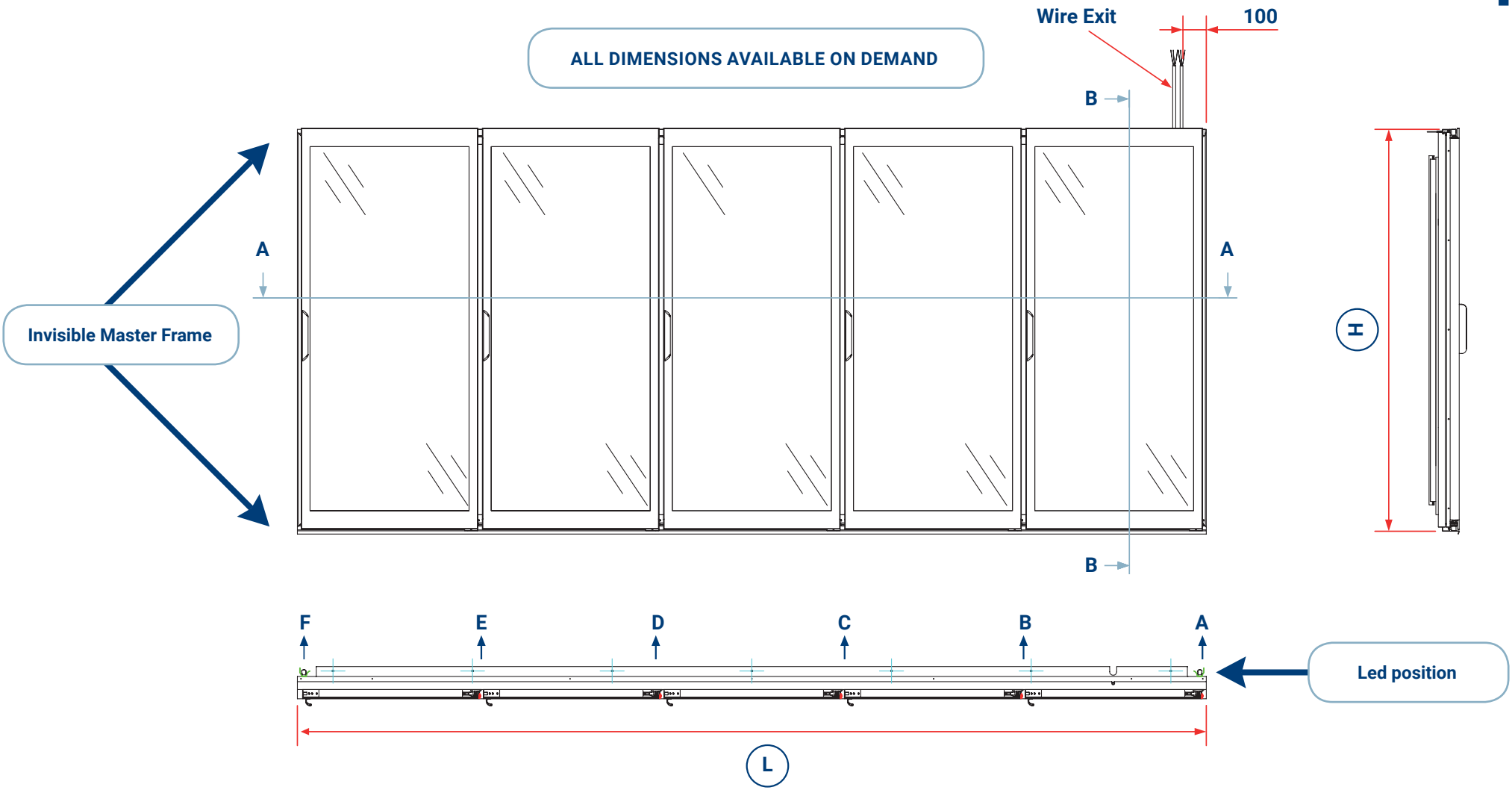

WideLookLt

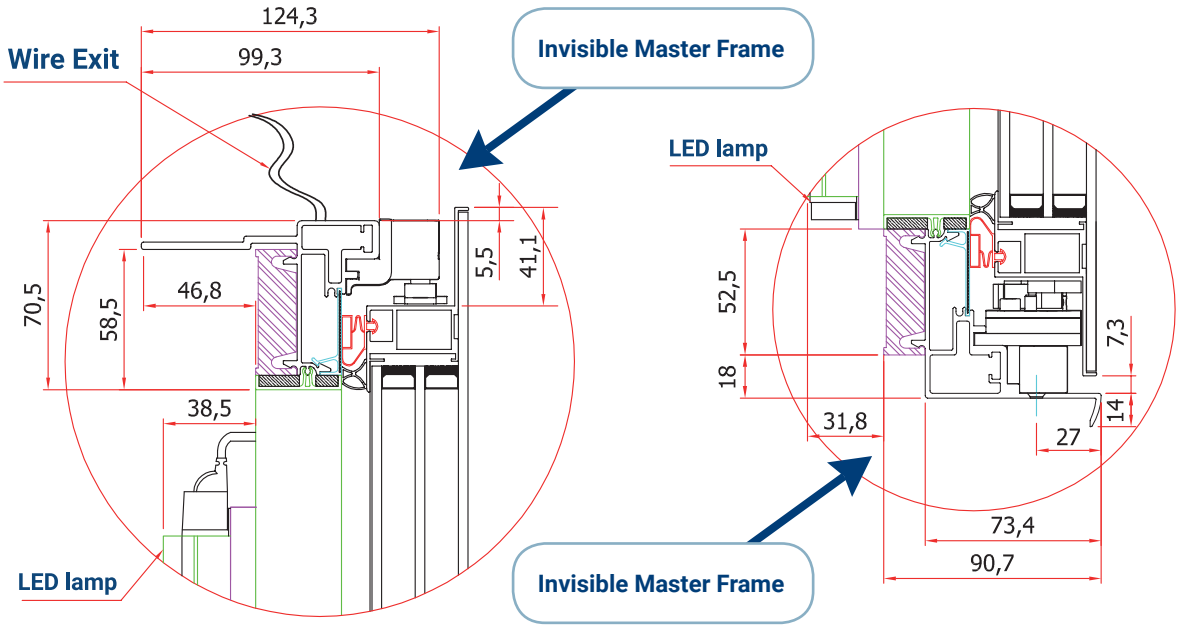

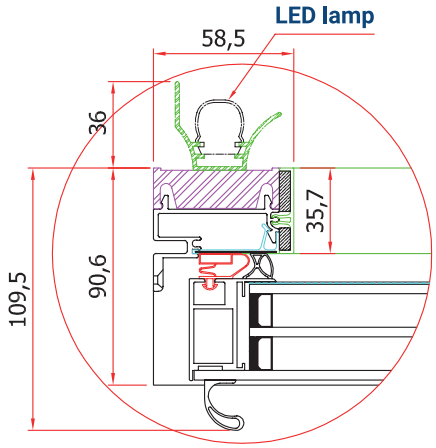

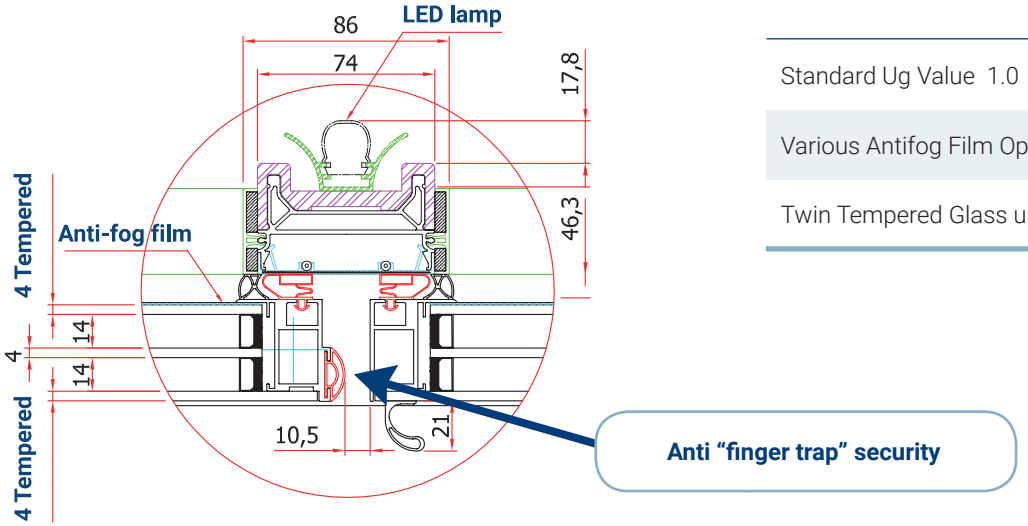

FRAME

Low Energy Frame	
Lighting	Led Equipped
	Led Prewired
Hinge System 150.000 Cycles Tested	
UNI 23953 Class 3 Tested	
100% Electronic Functionality Test	

DOOR GLASS

Standard Ug Value 1.0
Various Antifog Film Options
Twin Tempered Glass unit